MDS 485-OS CIGAR LAKE

REAR VIEW

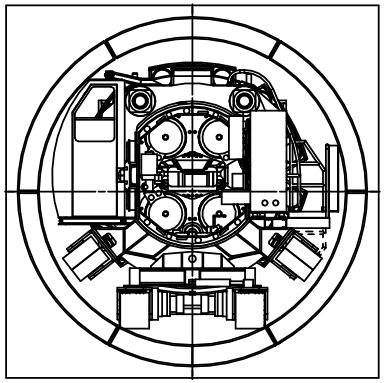

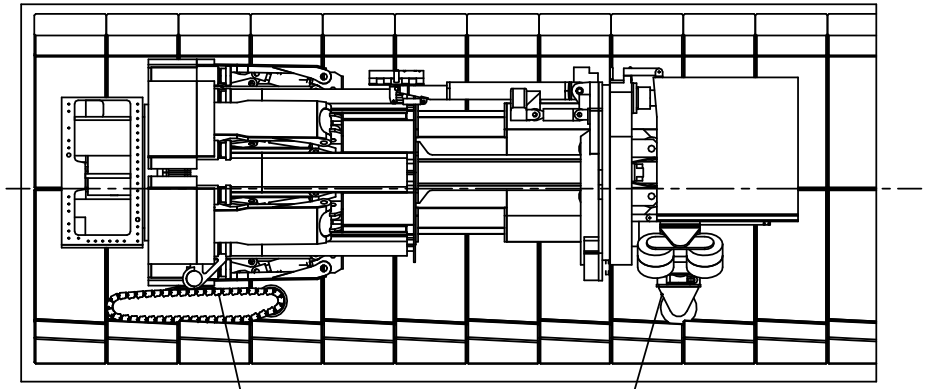

FRONT VIEW

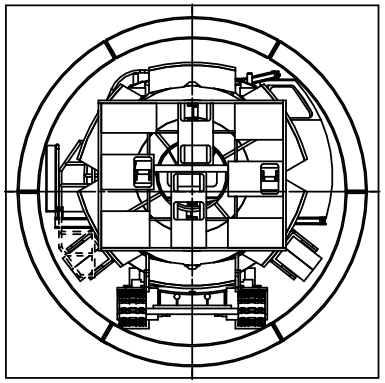

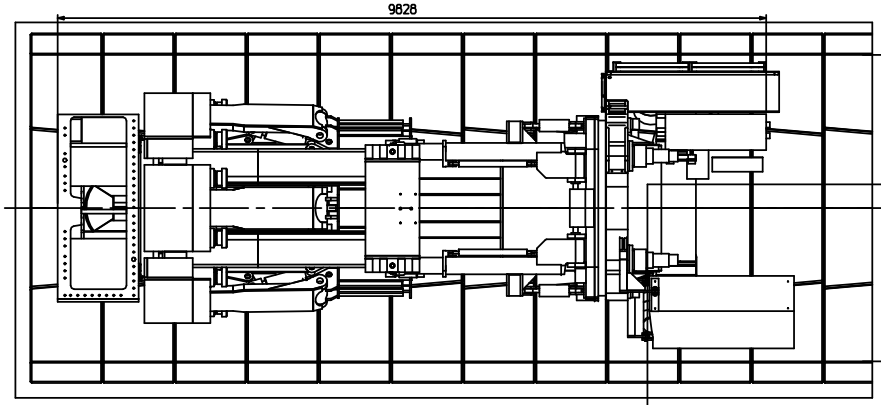

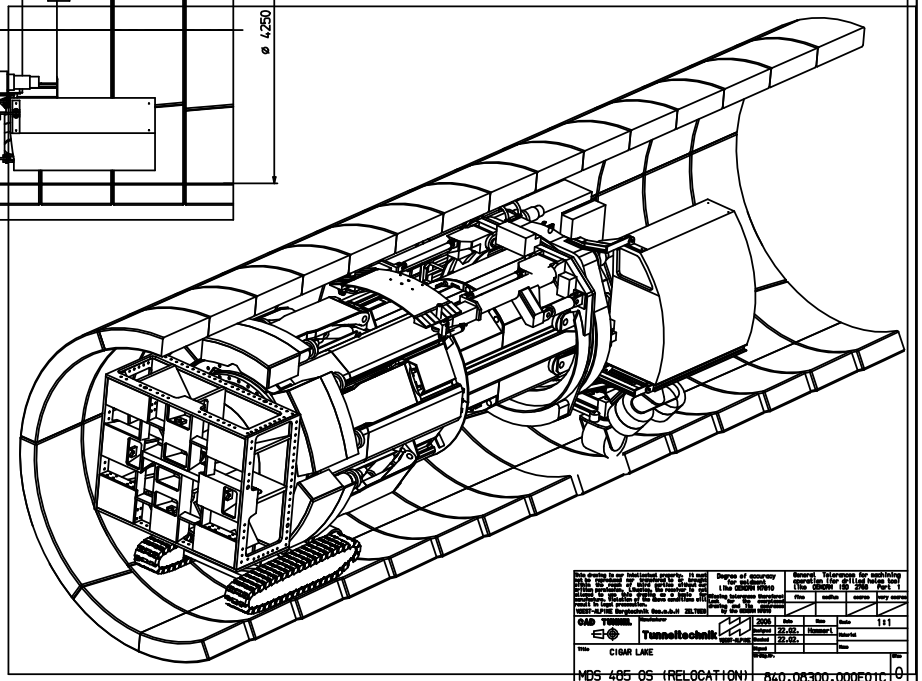

CAD TUNNEL	Tunneltechnik	Date	Name	Scale	1:1
		2005			
		Drawn	22.02.	Hammer L	
		Checked	22.02.		
		Approved			
Title	CIGAR LAKE				
				Drawing-No.	Rev.
		MDS 485 OS (RELOCATION)		840.08300.000E01C	0

Format DIN A0